STX52-156B-3.7-12Z-JXH-A

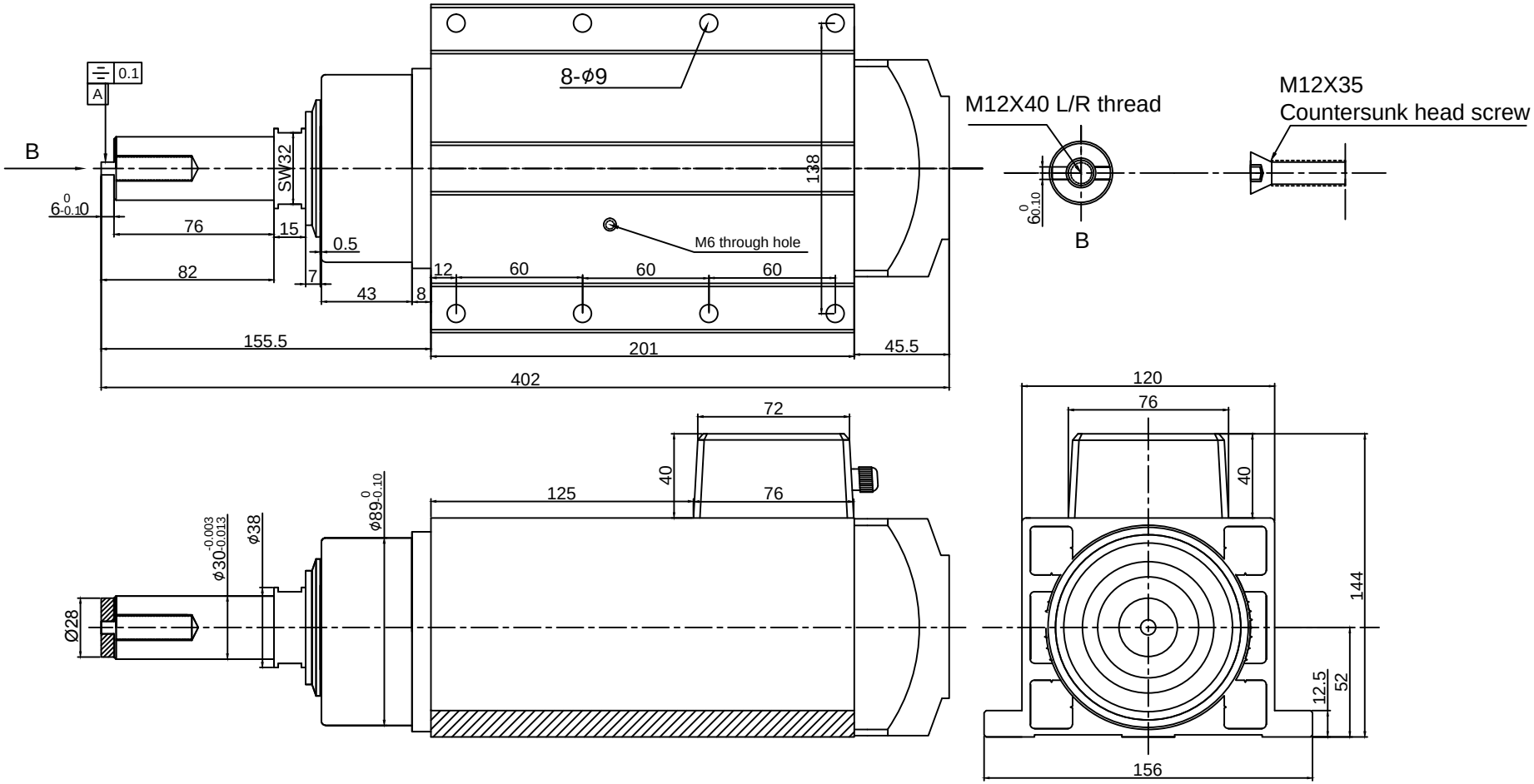

WHD SPINDLE MOTOR					
Power	Voltage	Current	Frequency	Cool	Speed
3.7KW	220V/380V	15.8A/9.2A	200Hz	Aircooling	12000RPM